Hoover®

Upright Vacuum Cleaner

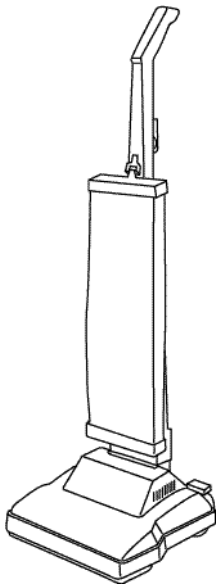

Review this manual before operating cleaner

Index

Assembling Cleaner.....2-5
Cleaner Descriptions.....5
How To Use 5-6
If You Have a Problem 8
Important Safeguards 1
Lubrication 8
Maintenance
Authorized Service.....9
Replacing Agitator 8
Replacing Belt.....8-9
Replacing Filter Bag 3-4
Thermal Protector 9
Unpacking Cleaner 2
Warranty 9

© 2001 The Hoover Company

www.hoover.com

Owner's Manual

ENGLISH ➜ pp.1-9
ESPAÑOL ➜ pág 10-15
FRANÇAIS ➜ p. 17-22

Thank you for selecting a HOOVER product.

This cleaner was inspected and packaged carefully before being shipped from the factory. If you should happen to need assistance during assembly or operation, call

1-800-944-9200 for an automated referral or authorized service outlet locations (U.S. only) or
1-330-499-9499 to speak with a representative in our Consumer Response Center or
Visit us online at **www.hoover.com** to find the service outlet nearest you (click on "Service" button).

Important Safeguards

When using an electrical appliance, always follow basic precautions, including the following:

READ ALL INSTRUCTIONS BEFORE USING THIS APPLIANCE

Warning: To reduce the risk of fire, electric shock, or injury:

- **Do not use outdoors or on wet surfaces.**
- **Close supervision is necessary when any appliance is used by or near children. Do not allow vacuum cleaner to be used as a toy or to run unattended at any time.**
- **Keep hair, loose clothing, fingers, feet and all parts of body away from openings, rotating agitator and other moving parts. Do not operate cleaner in bare feet or when wearing open toe shoes or sandals.**
- **Do not pick up anything that is burning or smoking, such as cigarettes, matches, or hot ashes.**
- **Do not use to pick up flammable or combustible materials such as gasoline or fine wood sandings or use in areas where they may be present.**
- **Avoid picking up hard, sharp objects with the cleaner. They may damage the cleaner and the bag.**
- **Always turn off this appliance before connecting or disconnecting hose.**
- **Do not use without dust bag or filters in place. Change bag frequently when picking up very fine materials such as powder.**
- **Use extra care when cleaning on stairs.**
- **Do not put any object into openings. Do not use with any opening blocked; keep free of dust, lint, hair, or anything that may reduce air flow.**
- **Do not pull or carry by cord, use cord as a handle, close door on cord or pull cord around sharp edges or corners. Do not run appliance over cord. Keep cord away from heated surfaces.**
- **Always disconnect cord from electrical outlet before servicing the cleaner.**
- **Unplug cleaner when not in use. Turn off all controls before unplugging.**
- **Do not unplug by pulling on cord. To unplug, grasp the plug, not the cord. Never handle plug or appliance with wet hands.**
- **The use of an extension cord is not recommended.**
- **Do not use with damaged cord or plug. If appliance is not working as it should, has been dropped, damaged, left outdoors, or dropped into water, take it to a Hoover Factory Service Center or Authorized Hoover Warranty Service Dealer (Depot).**
- **Use vacuum cleaner only for its intended use as described in the instructions. Use only attachments recommended by The Hoover Company; others may cause hazards.**

Save these instructions!

1. Assembling cleaner

It is extremely important to read and follow all instruction steps in order.

The assembled cleaner will look like this drawing.

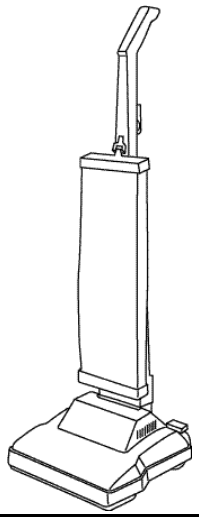

If you need assistance with any step of the assembly or operation, call:

1-800-944-9200 for an automated referral of authorized service outlet locations (U.S. only) OR

1-330-499-9499 to speak with a representative in our Consumer Response Center OR

Visit us on-line at **www.hoover.com** to find the service outlet nearest you (click on the “Service” button).

Carton contents

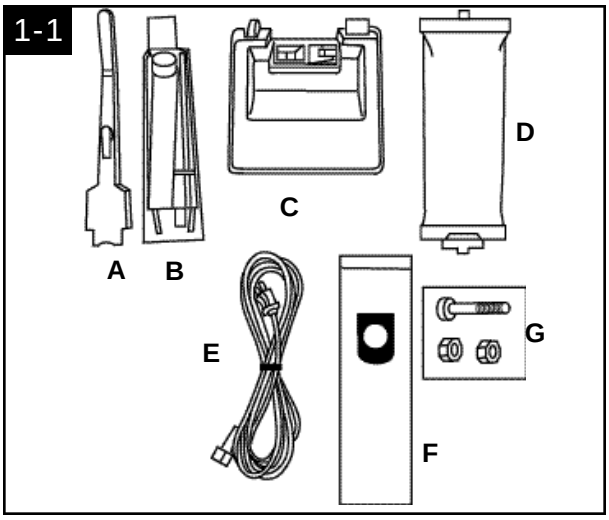

A.Upper handle
B.Lower handle
C.Cleaner body
D. Outer bag
E. Cord
F. Filter bag
G.Handle bolt and nut packet
(One extra nut included)

Remove all parts from carton and identify each item shown.

Make sure all parts, especially small items, such as G, are located before disposing of cardboard packing.

This cleaner is intended for household use.

Fill in and retain

The model and serial number are located on the bottom of the cleaner. For your personal records, please enter the COMPLETE model and serial number in the spaces provided and retain this information.

Your cleaner is model_____

and has serial number_____

It is suggested that you attach your sales receipt to this owner’s manual. Verification of date of purchase may be required for warranty service of your HOOVER product.

Assemble handle

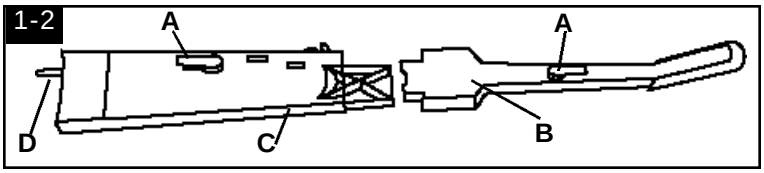

Place upper (B) and lower (C) handle sections on a flat surface with cord hooks (A) on top. With hands on sides of handle sections, push handle sections together firmly until they “click” into place.

Do not press against the rod (D) extending from the lower handle. If the rod breaks or bends, the cleaner will not work properly. Do not push handle together with your hands on the ends of the sections.

Attach cord

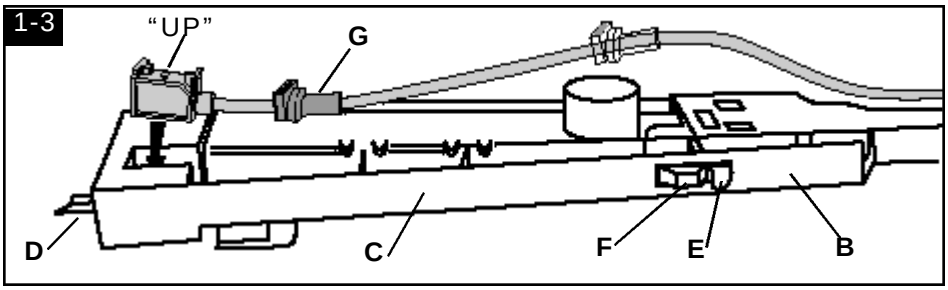

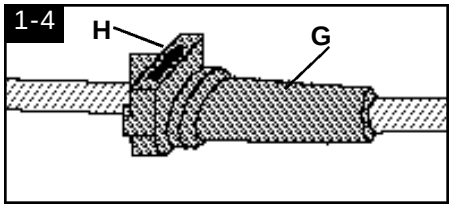

Rotate cord protector (G) on cord until you see its arrow (H).

Note: The **small red tab (E)** above the ON/OFF switch (F) is for **shipping purposes only** and may fall off during assembly. If it does not fall off, the tab will be removed during the final steps of assembly.

Turn handle over. Insert **large** rectangular end of cord into pocket in bottom of handle, with side marked “UP” visible.

Make sure rectangular end is pushed into handle as far as possible.

Slide cord protector (G) toward upper handle (B).

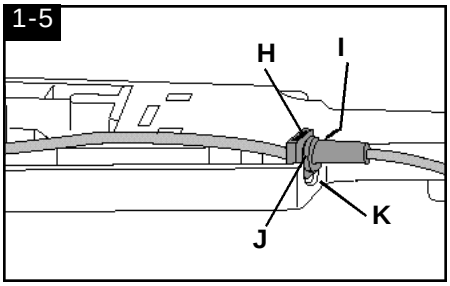

With arrow on cord protector (H) pointing toward arrow on upper handle (I), press groove (J) in cord protector into slot (K) in upper handle.

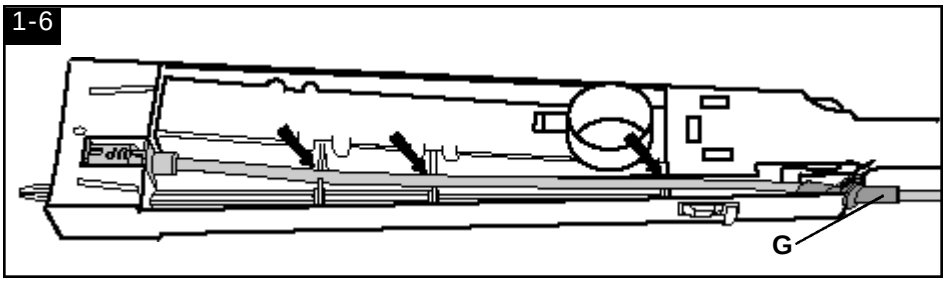

Pull cord tight.

Press cord into place at each of the three notches indicated and note correct positioning of (G).

Do not plug cleaner in until assembly is totally complete.

Continued ➜

Attach cloth outer bag

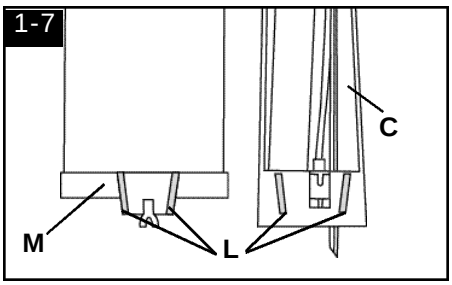

Note location of tapered rails (L) on back of outer bag base (M) and on front of lower handle (C).

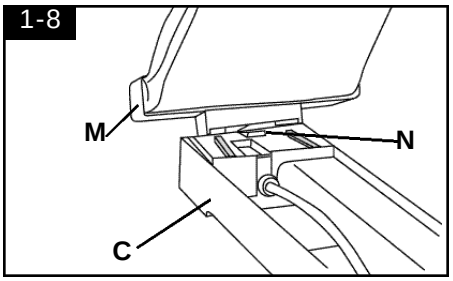

Slide rails on outer bag (M) onto rails on lower handle (C) until outer bag base snaps past the lock tab (N).

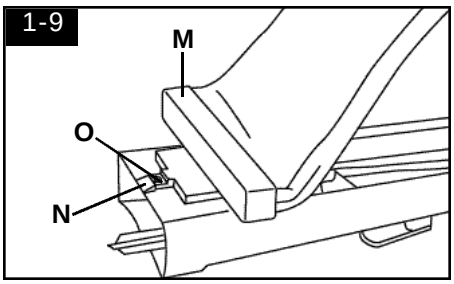

The hole (O) in the handle is visible through the U-shaped extension on the outer bag base (M) when the outer bag base is in position past the lock tab (N).

Be sure that power cord is pulled tight and pressed into each of the three notches (Fig. 1-6) before completing the following steps.

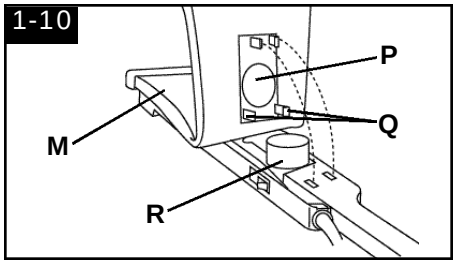

Note round opening (P) and hooks (Q) on back of outer bag (M).

Place opening over dirt tube (R). Unzip outer bag and place hand inside. **Press down firmly to snap hooks into handle.**

Attach handle

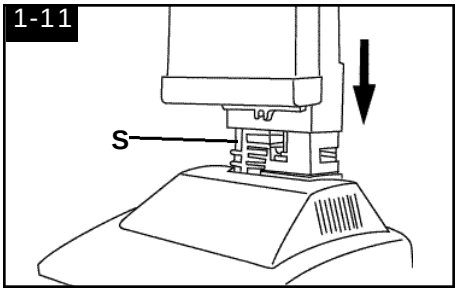

With outer bag to the front, place assembled handle onto handle base (S) of cleaner body.

Rock handle side to side while pushing down firmly. Extra pushing effort may be required.

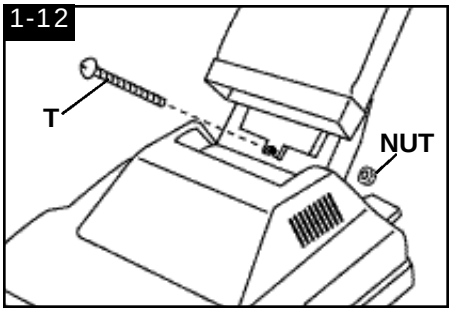

Press the handle release lever to move handle to the operating or middle position.

Push **bolt** (T) into hole on lower **front of handle.**

If bolt will not go through hole easily, handle is not pushed completely down.

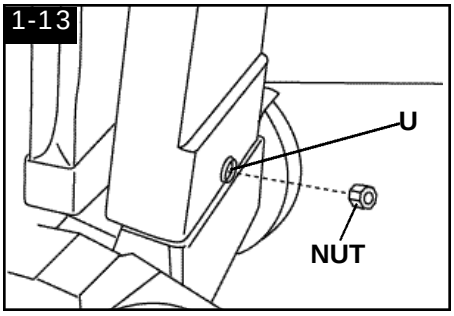

Place **nut** in recessed area (U) at **back of handle.** Hold nut in place while tightening bolt securely with a screw driver.

Note: Only one nut is needed on this model. The extra nut is not required but has been provided for your convenience.

Note: Do not hook bag clip to retainer. This will be done in a later step.

Attach filter bag

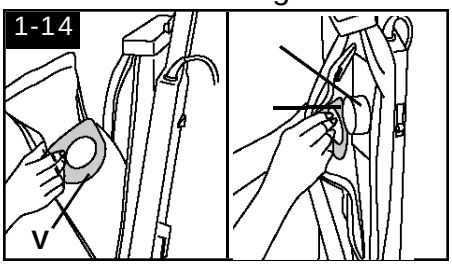

Hold filter bag collar (V) as shown. Align opening in filter bag with dirt tube (R) inside the outer bag.

Push bag collar firmly onto dirt tube. Tuck in filter bag; zip outer bag.

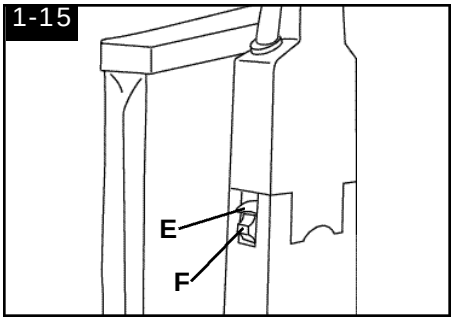

Break off red tab (E) above ON/OFF switch (F) by pushing **down** on tab. Discard tab.

Note: If tab has come off during assembly, make sure switch is in the OFF position (down) before plugging cord into an electrical outlet.

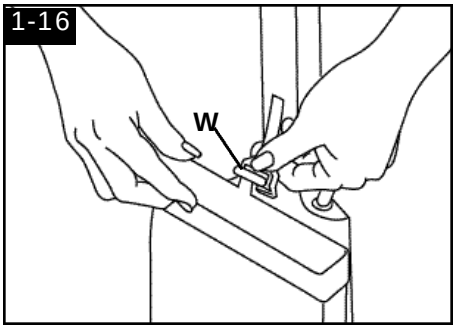

On upper front handle, grasp bag clip (W) and pull down firmly. Hook bag clip into slot in bag cap.

2. How to use

Cleaner description

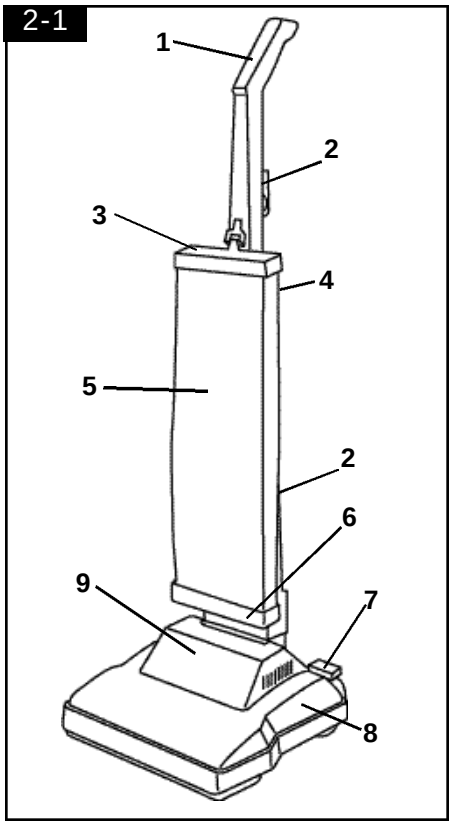

The assembled cleaner will look like the drawing.

1. **Handle**
2. **Cord hooks:** wrap cord around hooks for storage. The top hook can be rotated right or left for easy cord release.
3. **Top bag support**
4. **ON/OFF switch:** located on side of handle
5. **Outer bag**
6. **Bottom bag support**
7. **Handle release lever:** step on lever to lower handle to operating or low position.
8. **Cleaner body**
9. **Hood**

Operate cleaner only at voltage specified on data plate on bottom of cleaner.

Continued ➜

To reduce the risk of electric shock, this appliance has a polarized plug (one blade is wider than the other). This plug will fit in a polarized outlet only one way. If the plug does not fit fully in the outlet, reverse the plug. If it still does not fit, contact a qualified electrician to install the proper outlet. Do not change the plug in any way.

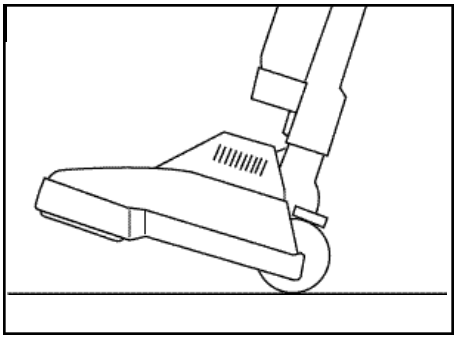

To turn cleaner on, push switch up.

To turn cleaner off, push switch down.

Plug cord into electrical outlet. Turn cleaner on and, with handle in upright position, pull back on handle until front of cleaner is lifted off the carpet. This insures that the paper bag is inflated.

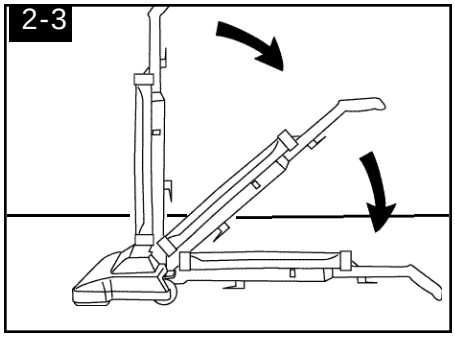

Handle positions

The handle of your cleaner has three positions; **upright** for storage and when using cleaning tools; **operating** for general operation on carpet and floors; **low** for reaching under low furniture. Step on handle release lever to lower handle.

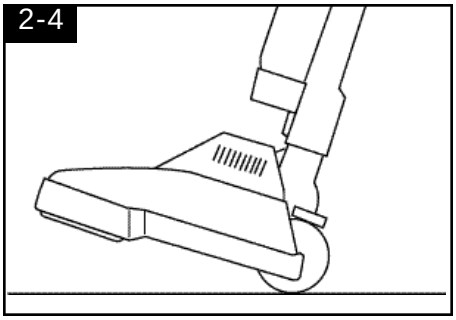

Transporting cleaner

To move your cleaner from room to room, put handle in upright position, tilt cleaner back on rear wheels, and push forward.

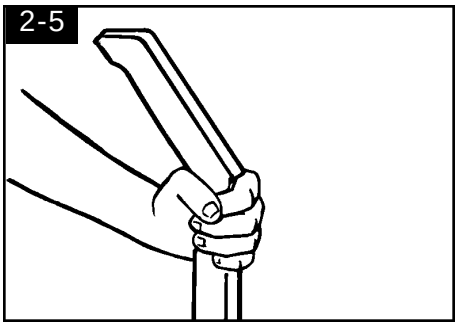

The cleaner can also be moved by lifting it as shown.

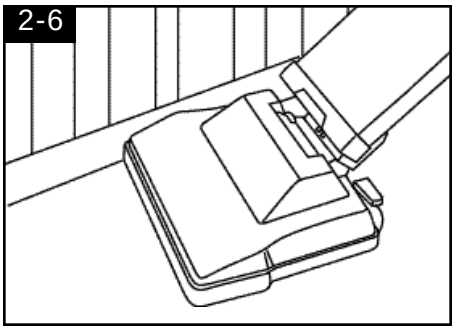

Edge cleaning

Edge cleaning is provided on both sides of nozzle to remove dirt in carpet near baseboards and furniture. Guide either side of nozzle parallel to edge of carpet or furniture.

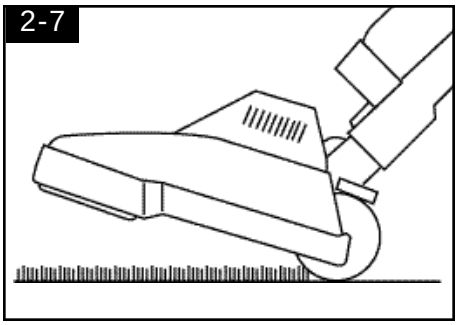

Cleaning lightweight flexible rugs

Stand on one end of rug and move cleaner toward other end or edge. Before reaching edge, push down on handle. This will lift up the nozzle (front of cleaner) and will prevent rug from clinging to cleaner. Continue to lift up nozzle so that when you have reached the edge, it is completely off the rug. Move cleaner back to start again, lower nozzle, and use only forward strokes.

3. Maintenance

The following sections are concerned with proper maintenance of the cleaner. Familiarize yourself with these home maintenance tasks and keep this owner's manual in a convenient place where you can refer to it when needed. Proper use and care of your cleaner will ensure continued cleaning effectiveness.

The filter bag

When to replace

Check filter bag from time to time. It is recommended that you change the filter bag when dirt reaches the dotted line. If more dirt than this accumulates, your cleaner may not operate effectively.

CAUTION: Very fine materials, such as face powder, cornstarch, fireplace ashes or fireplace soot, may seal the filter bag and may cause it to burst even though it is only partially full of dirt. When cleaner is used to remove material of this nature, change filter bag often.

Where to buy

Filter bags may be purchased from your Authorized Hoover Dealer (Depot), leading retailers, from a Hoover Factory Service Center, or through The Hoover Company online at www.hoover.com. **When ordering filter bags, be sure to give the model number of your cleaner.**

What to buy

For improved cleaning effectiveness, use only **Genuine HOOVER® Allergen Filtration Type A** disposable filter bags. Regular **HOOVER® Type A** disposable filter bags also fit your cleaner.

To assure that your cleaner operates at peak performance, it is imperative that you use only genuine HOOVER filter bags made by The Hoover Company. HOOVER bags can be identified by these trademarks –

Hoover®

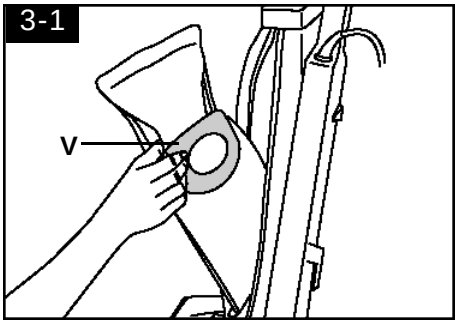

How to replace

Disconnect cleaner from electrical outlet.

To change filter bag, unzip outer bag, grasp sides of filter bag collar (V) and pull collar from tube.

Note: Do not clean out old filter bag and reuse. Discard used filter bag.

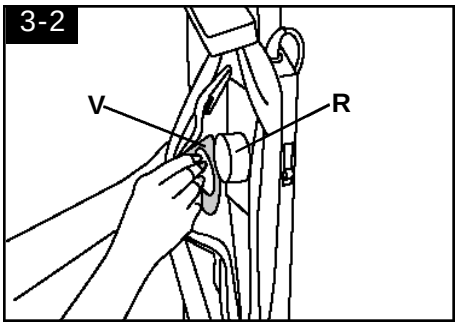

Hold new filter bag as shown. Align opening in filter bag with dirt tube (R).

Push bag collar (V) **firmly** onto tube.

Tuck in filter bag; zip outer bag.

The belt

The belt on your HOOVER cleaner causes the agitator to rotate and is important for the effective operation of the cleaner. The belt is located under the bottom plate of the cleaner and should be checked from time to time to be sure it is in good condition.

When to replace

To check belt, remove bottom plate as shown in “How to replace belt.” Replace belt if it is stretched, cut or broken.

What to buy

To assure effective operation, use only genuine HOOVER belts with your cleaner. When purchasing a new belt, ask for Hoover **part No. 40201190.**

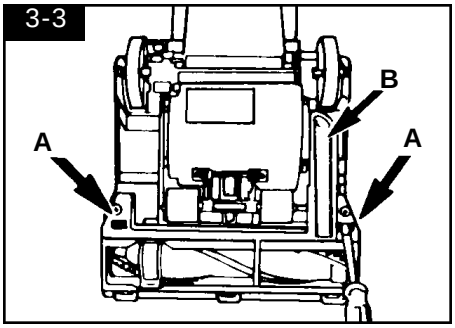

How to replace

Disconnect cleaner from electrical outlet.

Place handle in lowest position and turn cleaner over.

To remove bottom plate insert end of flat screwdriver into wide area of right-hand slot (A) and push handle of screwdriver to the rear. Repeat in left-hand slot (A).

Lift extension (B) of bottom plate, rotate plate and remove from cleaner body.

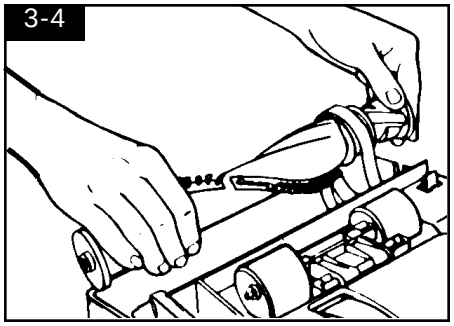

Remove agitator and broken agitator belt. (If belt is not broken but is stretched or cut, proceed with steps for Figs. 3-7 to 3-9 and pull belt off motor pulley. Then continue with Fig. 3-5).

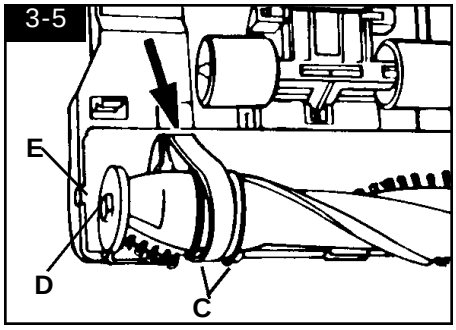

Slip agitator through new belt **(with lettering toward outside of cleaner)** and position belt in belt guide (C). Push end of belt into opening in cleaner body.

Reposition agitator making sure to align flat sides of projection (D) on belt end of agitator with flat sides of slot (E) in cleaner body.

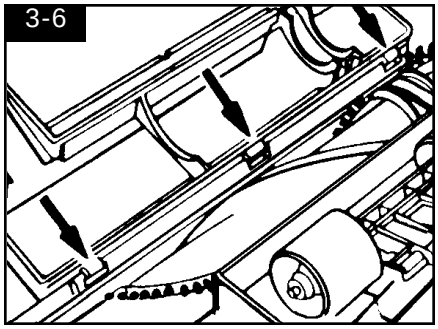

Place the three tabs on bottom plate into slots in front of cleaner body. Snap bottom plate into place over agitator.

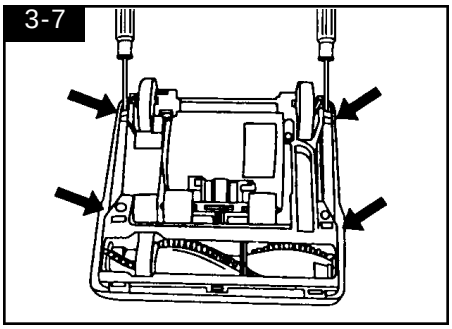

Remove hood by inserting end of flat screwdriver into one of the four slots beside an arrow on bottom of cleaner.

Pry outward to release latch. Repeat to release latches at the remaining three arrows.

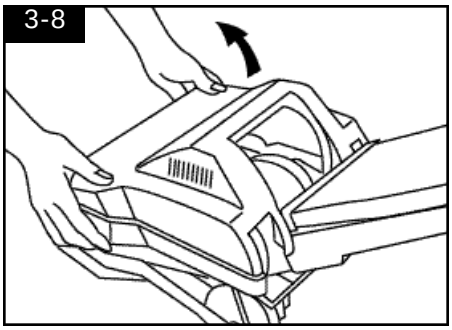

Turn cleaner over and lift off hood.

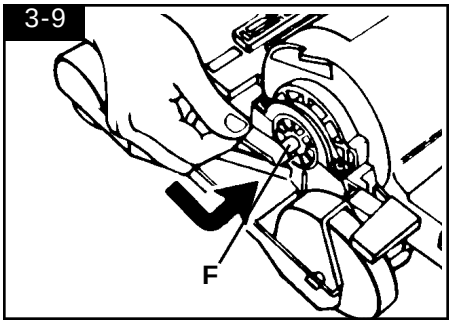

Stretch new belt onto motor pulley (F).
Extra effort may be required to stretch belt onto pulley.
Turn agitator, making sure belt is not pinched between agitator and cleaner body. The belt must rotate freely inside the belt guide. If the agitator does not turn, remove bottom plate and reposition belt in the belt guide.

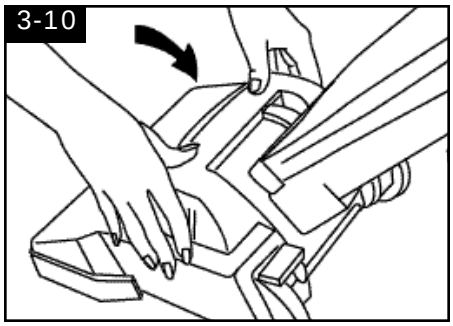

Place hood on cleaner body and press to snap all four latches. Pull up on hood slightly to make sure all four latches are secured.

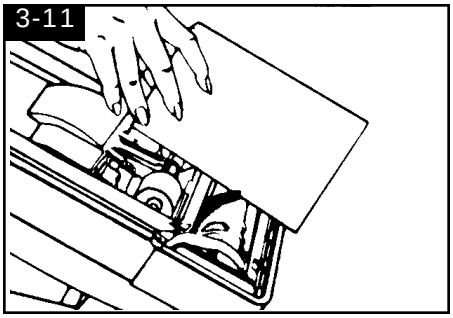

The agitator

When to replace

Disconnect cleaner from electrical outlet.

When agitator brushes are worn, the agitator should be replaced.

To check condition of brushes, move edge of a card across bottom plate while turning agitator. To maintain cleaning effectiveness, replace agitator if brushes do not touch card.

What to buy

The agitator may be replaced with either a single or double row of brushes.

Single row of brushes - Hoover part **No. 48414-077.**

Double row of brushes - Hoover part **No. 48414-081.**

How to replace

Disconnect cleaner from electrical outlet.

Remove hood as shown in Figs. 3-7 and 3-8 of **"How to replace belt".**

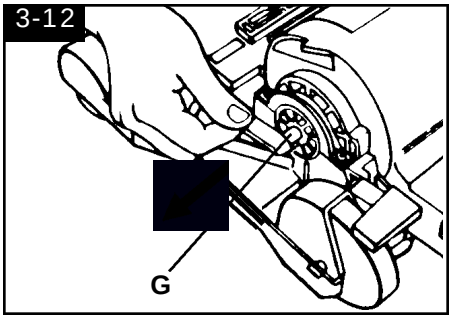

Pull belt off motor pulley as shown.

Remove bottom plate as shown in Figs. 3-3 & 3-4 of **"How to replace belt".** Remove agitator from cleaner and discard.

Reposition belt and new agitator by referring to Figs. 3-5 to 3-9.

If you have a problem

If a minor problem occurs, it usually can be solved quite easily when the cause is found by using the checklist below.

Problem: Cleaner won't run

Possible cause
Possible solution

- **Not firmly plugged in**
- *Plug unit in firmly*
- **No voltage in wall plug**
- *Check fuse or breaker*
- **Blown fuse/tripped breaker**
- *Replace fuse/reset breaker*

Problem: Cleaner won't pick up

Possible cause
Possible solution

- **Broken or worn belt**
- *Replace belt*
- **Brush roll brushes worn**
- *Replace brush roll*
- **Filter bag full**
- *Change filter bag*

Lubrication

The motor is equipped with bearings that contain sufficient lubrication for the life of the motor. The addition of lubricant could cause damage. **Therefore, do not add lubricant to motor bearings.**

The agitator is equipped with two ball bearings that should be lubricated periodically by a Hoover Factory Service Center or an Authorized Hoover Warranty Service Dealer (Depot).

Thermal protector

(some models only)
An internal thermal protector has been designed into your cleaner to protect it from overheating.

When the thermal protector activates, the cleaner will stop running. If this happens, proceed as follows:

1. Turn the cleaner OFF and disconnect it from the electrical outlet.
2. **When cleaner is unplugged and the motor cools for 30 minutes,** the thermal protector automatically resets and cleaning may continue.

If the thermal protector continues to activate after following the above steps, your cleaner may need servicing (see “Service” section).

Service

To obtain approved HOOVER service and genuine HOOVER parts, locate the nearest **Hoover Factory Service Center or Authorized Hoover Warranty Service Dealer (Depot)** by:

- checking the Yellow Pages under “Vacuum Cleaners - Household” OR
- checking the list of Factory Service Centers provided with this cleaner OR
- calling 1-800-944-9200 for an automated referral of authorized service outlet locations (U.S. only) OR
- visiting us on-line at **www.hoover.com** to find the service outlet nearest you (click on “Service” button).

Do not send your cleaner to The Hoover Company in North Canton for service, this will only result in delay.

If further assistance is needed, contact The Hoover Company Consumer Response Center, North Canton, Ohio 44720, Phone: 330-499-9499.

In Canada, contact Hoover Canada, Burlington, Ontario L7R4A8, Phone: 1-800-263-6376.

Always identify your cleaner by the **complete** model number when requesting information or ordering parts. (The model number appears on the bottom of the cleaner.)

Hoover Cleaning Performance

This Hoover Cleaning Performance System is for comparing the relative progressive performance of **Hoover uprights only** and not for comparison with any other brands. The majority of this rating is based upon the American Society for Testing and Materials (ASTM) Carpet Cleaning Effectiveness Testing (ASTM Test F608). Other performance factors include Hose Power (ASTM Test F558), Surface Litter Cleaning, Hard Floor Cleaning, Edge Cleaning, Air Filtration and Cleaning Width.

Full One Year Warranty

(Domestic Use)

Your HOOVER ® appliance is warranted in normal household use, in accordance with the Owner’s Manual against original defects in material and workmanship for a period of one full year from date of purchase. This warranty provides, at no cost to you, all labor and parts to place this appliance in correct operating condition during the warranted period. This warranty applies when the appliance is purchased in the United States including its territories and possessions, or in Canada or from a U.S. Military Exchange. Appliances purchased elsewhere are covered by a limited one year warranty which covers the cost of parts only. This warranty does not apply if the appliance is used in a commercial or rental application.

Warranty service can only be obtained by presenting the appliance to one of the following authorized warranty service outlets. Proof of purchase will be required before service is rendered.

1. **Hoover Factory Service Centers**
2. **Hoover Authorized Warranty Service Dealers (Depots)**

For an automated referral of authorized service outlets in the U.S.A., phone 1-800-944-9200.

This warranty does not cover pick up, delivery, or house calls; however, if you mail your appliance to a Hoover Factory Service Center for warranty service, transportation will be paid one way.

While this warranty gives you specific legal rights, you may also have other rights which vary from state to state.

If further assistance is needed, or if there are questions concerning this warranty or the availability of warranty service outlets, write or phone the Consumer Response Center, The Hoover Company, 101 East Maple St., North Canton, Ohio 44720. Phone 1-330-499-9499

In Canada, contact Hoover Canada, Burlington, Ontario L7R4A8, 1-800-263-6376.